LED Constant Current Drivers with Power Switching

400, 700 mA / 150 W

These electronic constant current sources are especially designed for use in street lighting systems. They provide a simple power-reduction option by connecting a further phase, which makes it possible to switch between 400 mA and 700 mA.

Electrical characteristics

Secondary side switching of LED modules is not allowed.
Power factor: 0.95
Efficiency: > 0.93
Service life time: 50,000 hrs

Connection details

Mains voltage: 220–277 V ± 10%
Mains frequency: 50–60 Hz
IP20 version: Push-in terminals: 0.75–2.5 mm²
- Quantity of push-in terminals:
- 5x1-pole primary
- 2x1-pole secondary

IP66 version: Pre-assembled connection leads:
- primary: 5x1 mm², 200 mm
- secondary: 2x1.5 mm², 200 mm
- Suitable for independent operation when capable connector acc. to EN 60598 is used.

Safety features

Protection against transient main peaks up to 3 kV (between L and N) and up to 4 kV (between L, N and PE)
Electronic short-circuit protection
Overload protection
Protection against "no load" operation
Degree of proteciton: IP20 or IP66
Protection class I

IP20

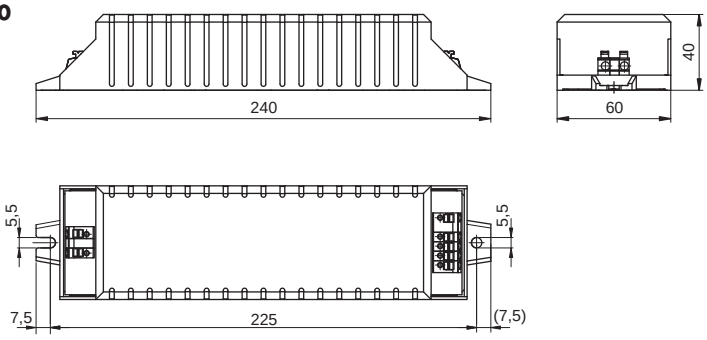

IP66

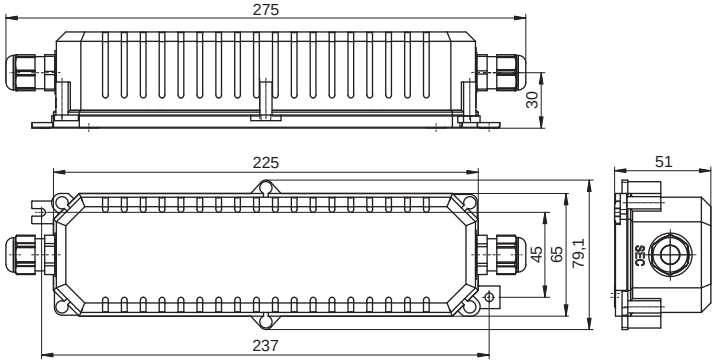

Max. output W	Type	**Ref. No.**	Mains voltage 50–60 Hz V	Mains current mA	Current output DC mA	Voltage output DC V	Max. voltage without load DC V	Ambient temperature t_a °C	Casing temperature t_c °C	Weight g
IP20 – Dimensions: 240 x 60 x 40 mm										
150	ECXd 700.023	**186202**	220–277	735–585	700 +5/-10% 400 +5/-10%	48–215 48–375	445	-40 to 60	75	440
IP66 – Dimensions: 275 x 79.1 x 51mm										
150	ECXd 700.023	**186203**	220–277	735–585	700 +5/-10% 400 +5/-10%	48–215 48–375	445	-40 to 60	75	560

Power reduction can be effected with VS Power Switches PR12 K LC and PR12 K D (page 63 of the Standard Technologies' Catalogue).
These power switches are used to switch the 230-V step-dim input on the LED driver of a luminaire.